Electrolux PROFESSIONAL

Modular Cooking Range Line 700XP Two Wells Electric Fryer Top 5 liter

ITEM #

MODEL #

NAME #

SIS #

AIA #



371074 (E7FRED2A00)	5+5-lt electric Fryer Top with 2 wells (internal heating elements), 2 baskets and lids included
371139 (E7FRED2A0N)	5+5-lt electric Fryer Top with 2 wells (internal heating elements), 2 baskets and lids included

Short Form Specification

Item No.

To be installed on open base installations, bridging supports or cantilever systems. High efficiency tilting incoloy armoured heating elements (9kW) placed inside the wells. Deep drawn well. Oil drains through a tap on the front. Exterior panels in stainless steel with Scotch Brite finish. One piece pressed work top in 1.5 mm thick stainless steel. Right-angled side edges to allow flush-fitting junction between units.

APPROVAL:

Main Features

- Unit to be mounted on open base cupboards, bridging supports or cantilever systems.
- Thermostatic regulation of oil temperature up to a maximum of 185 °C.
- Overheat protection thermostat as standard on all units.
- Oil drains through a tap positioned on the front the wells.
- All major compartments located in front of unit for ease of maintenance.
- IPx4 water protection.
- Incoloy armoured heating elements located inside the well can be lifted up for easier cleaning.
- Optional portable oil quality monitoring tool (code 9B8081) for efficient oil management.
- Suitable for countertop installation.

Construction

- Interior of well with rounded corners for ease of cleaning.
- All exterior panels in Stainless Steel with Scotch Brite finishing.
- One piece pressed 1.5 mm work top in Stainless steel.
- Model has right-angled side edges to allow flush fitting joints between units, eliminating gaps and possible dirt traps.

Included Accessories

- 1 of 2 baskets for 2x5lt and 12lt PNC 960638 electric fryers

Optional Accessories

- Junction sealing kit PNC 206086 ❑
- Support for bridge type installation, 800mm PNC 206137 ❑
- Support for bridge type installation, 1000mm PNC 206138 ❑
- Support for bridge type installation, 1200mm PNC 206139 ❑
- Support for bridge type installation, 1400mm PNC 206140 ❑
- Support for bridge type installation, 1600mm PNC 206141 ❑
- Support for bridge type installation, 400mm PNC 206154 ❑
- Chimney upstand, 400mm PNC 206303 ❑
- Right and left side handrails PNC 206307 ❑
- Back handrail 800 mm PNC 206308 ❑
- Chimney grid net, 400mm (700XP/900) PNC 206400 ❑

• 2 side covering panels for top appliances	PNC 216277	❑
• Trolley with lifting & removable tank (only for 371139)	PNC 922403	❑

The company reserves the right to make modifications to the products without prior notice. All information correct at time of printing.

Modular Cooking Range Line
700XP Two Wells Electric Fryer Top 5 liter

Front

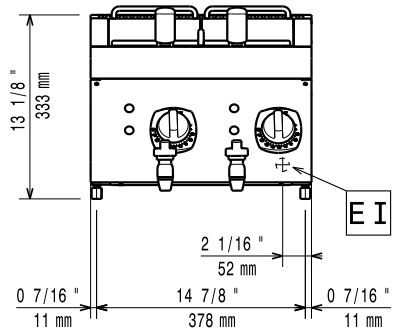

Side

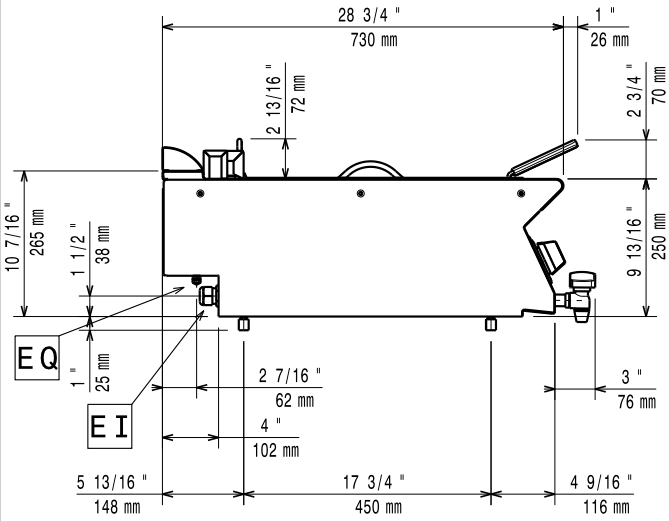

EI = Electrical inlet (power)
EQ = Equipotential screw

Top

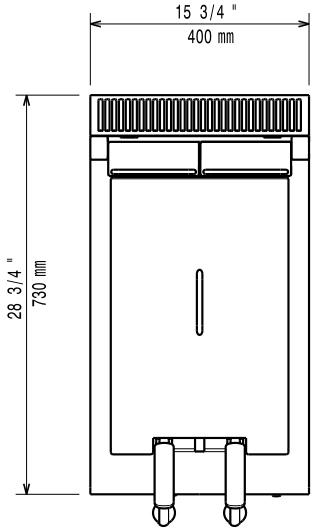

Electric

Supply voltage:	
371074 (E7FRED2A00)	380-400 V/3N ph/50/60 Hz
371139 (E7FRED2A0N)	230 V/3 ph/50/60 Hz
Total Watts:	9 kW

Key Information:

If appliance is set up or next to or against temperature sensitive furniture or similar, a safety gap of approximately 150 mm should be maintained or some form of heat insulation fitted.

Usable well dimensions (width):	110 mm
Usable well dimensions (height):	235 mm
Usable well dimensions (depth):	420 mm
Well capacity:	4 lt MIN; 5 lt MAX
Thermostat Range:	105 °C MIN; 185 °C MAX
Net weight:	20 kg
Shipping weight:	
371074 (E7FRED2A00)	34 kg
371139 (E7FRED2A0N)	33.9 kg
Shipping height:	
371074 (E7FRED2A00)	530 mm
371139 (E7FRED2A0N)	540 mm
Shipping width:	460 mm
Shipping depth:	820 mm
Shipping volume:	0.2 m³
[NOT TRANSLATED]	
371074 (E7FRED2A00)	EFI7205
371139 (E7FRED2A0N)	N7FE2

The company reserves the right to make modifications to the products without prior notice. All information correct at time of printing.

2026.11.20